Transfer or duplication of this doucument as well as the utilisation or communication of its content are not permitted unless express consen is granted. Violations give rise to claims for damages. All rights reserved in case of patent, utility model or design patent registrations.

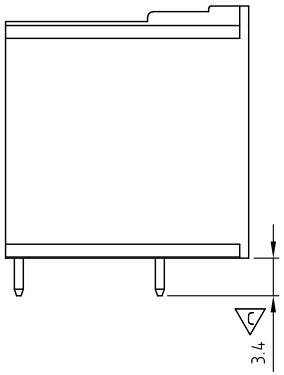

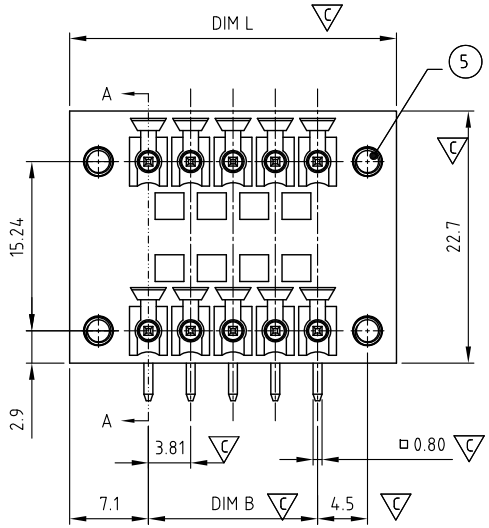

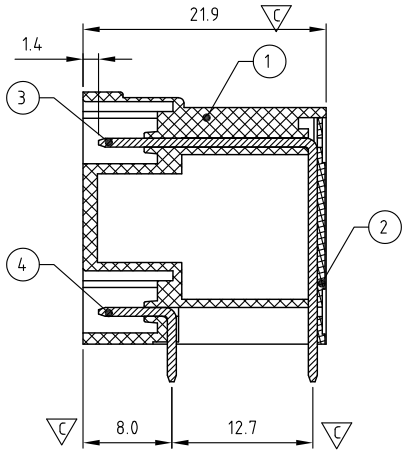

SECTION A-A

Technical data

1.Nominal voltage: 300V/8A
PITCH:3.81mm

2.Insulation Withstands Voltage:
AC 1600V/MIN

3.Insulation Resistace:
1000MΩ or more at DC500V

4.Using temperature range:-40°C~115°C

5.Soldering temperature range:250°C±10°C/5sec

6.Safety approval:

7.RoHS Compliance

8.Critical dimension:

9.Undimen sioned Tolerances:

Dim.L=(1/2P-1)x3.81+14.2
Dim.B=(1/2P-1)x3.81
P= number of poles 4-48P

	Dim B	Dim L
0-30mm	±0.15	±0.20
over 30mm-60mm	±0.20	±0.25
over 60mm-90mm	±0.25	±0.30
over 90mm	±0.30	±0.40

HAFH381 xx x xxx
①② ③

①Poles 04-48(2×2p-2×24p)
②Color
0 Black 3 Orange 5 Green 6 Blue.....
③Custom
000 K MARK 00K KUNACON MARK

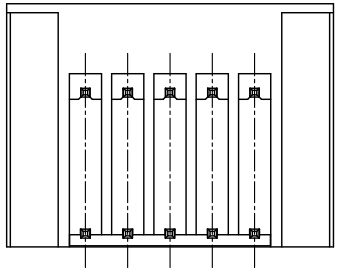

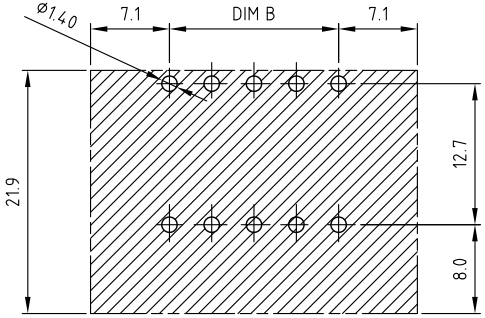

PCB LAYOUT

ITEM	NAME OF PART	MATERIAL	NOTES	Q"TY
5	FLANGE NUT	BRASS	M2.5x0.45	4
4	Short PIN	COPPER	TIN PLATED	1/2P
3	Long PIN	COPPER	TIN PLATED	1/2P
2	COVER	PA66 UL94V-0		1
1	BODY	PA66 UL94V-0		1

DWG.	NEAL Zhang	DATE	2023.04.13	UNITS:	MM	SHEET:	1 OF 1
CHK.	NEAL Zhang	DATE	2023.08.24	SCALE:	NONE 2:1 (:)	REV.: B	
APP.		DATE		TITLE:	HA-FH381 Serles W/F type Right-Angle (90D)		
				PART NO.	HAFH381xxxxxx		
				DWG NO.	HA-F381-B001		

Tolerance

X.	±0.50
X.X	±0.30
X.XX	±0.10
X°	±1°

KUNA Contact Technology Co, Ltd
http://www.kunacon.com

REV	SIGN	DESCRIPTION	CHK.	DATE
B	1	新開模	NEAL	08/24-23